# Product transfer application
# Industrial gases

KLAW

Safe product transfer solutions

## KLAW minimizes the risk of industrial gas spillage

**When fitting a KLAW Breakaway Coupling you ensure that everything has been done to eliminate risk and mitigate legal action.**

The KLAW K2C and K1C industrial range offers a safe and identifiable parting point within the transfer system and will close down flow in an emergency such as a drive-off or other strain on the transfer system.

The experience and track-record of KLAW therefore enables you to minimise risk to assets, personnel, the environment and reputation and protect against downtime and clean-up costs, litigation and injury.

The KLAW Cryogenic range of couplings are designed for low temperature transfer of Industrial Gases to operating temperatures of -196°C (-320°F).

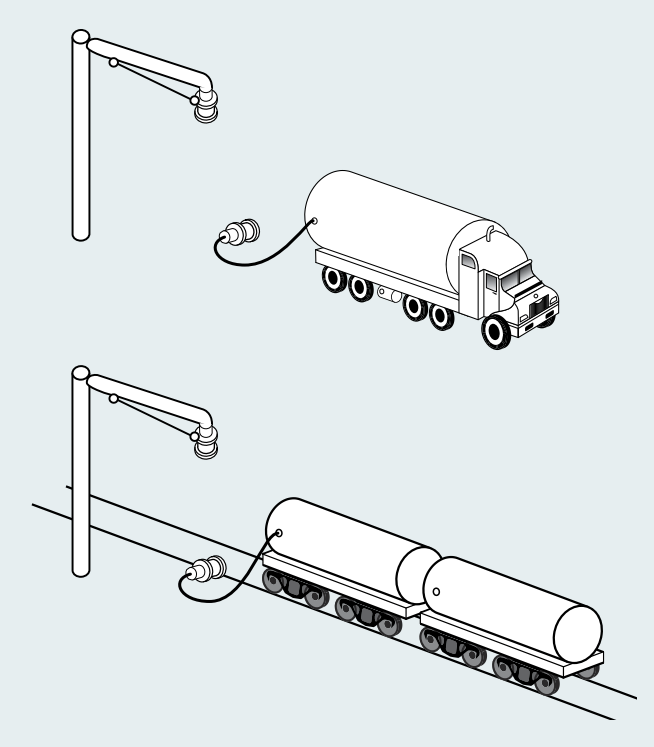

**KLAW Breakaway Systems prevent spillage, damage to assets and injury to personnel.**

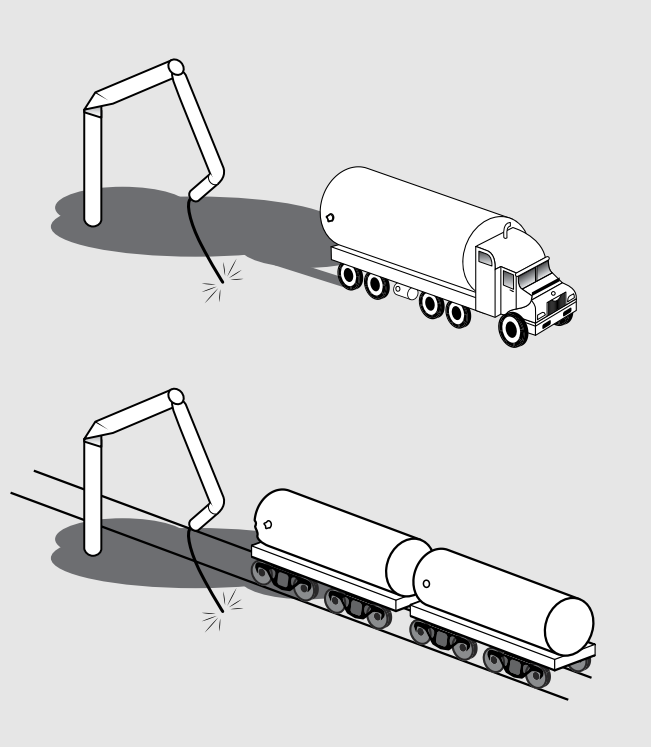

**The lack of a Breakaway System in the event of a drive-off can be catastrophic.**

## Tanker, railcar and refuelling stations

### Typical systems

Bunkering, Refuelling, Railcar, Road Tanker and Loading Arm systems involved in the transfer of cryogenic industrial gas media.

### Typical media applications

- **LNG**
- **Liquid Nitrogen**
- **Liquid Oxygen**
- **Ethylene**
- **Ethane**
- **Argon**
- **$C0_2$**

**Typical applications**
Loading and off-loading in Trailer, Railcar and Refuelling operations

### Example Loading Arm application

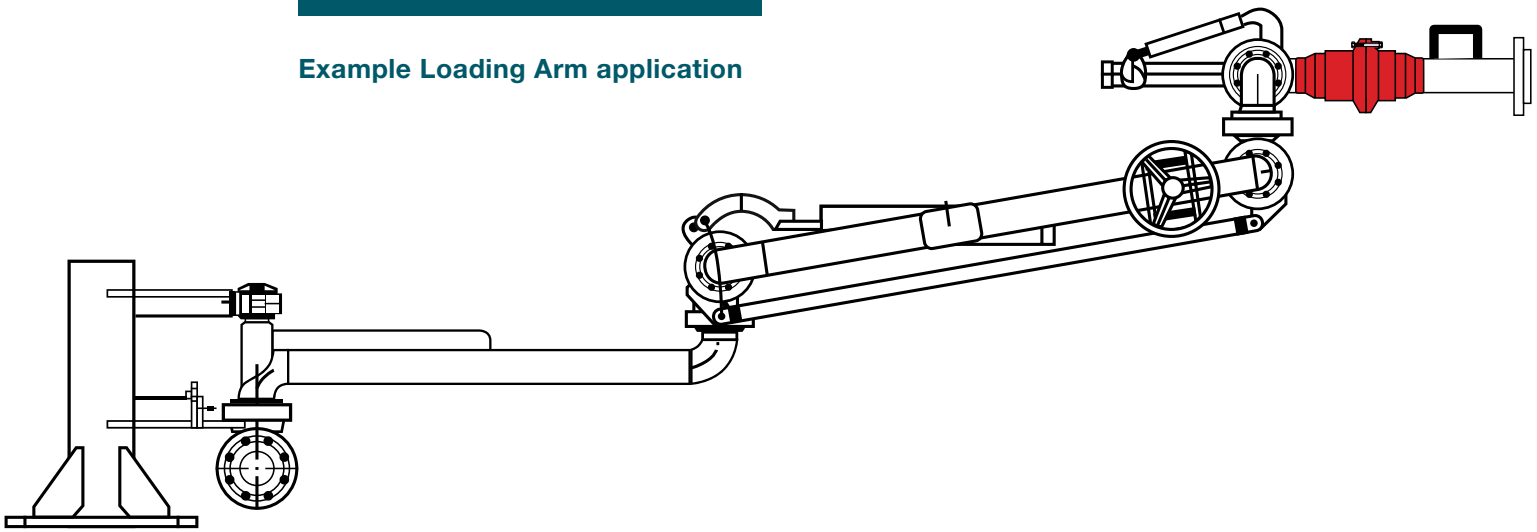

## The KLAW cryogenic range offers:

- 100% closure
- Minimum headloss
- Compact and lightweight design
- Protection of Loading Arm equipment

## Avoiding the consequences of partial break

Partial break occurs when a coupling only partially separates. A partial break event provides a situation where spillage is uncontrollable.

The valve mechanism within the KLAW range is designed to avoid the risk of partial break.

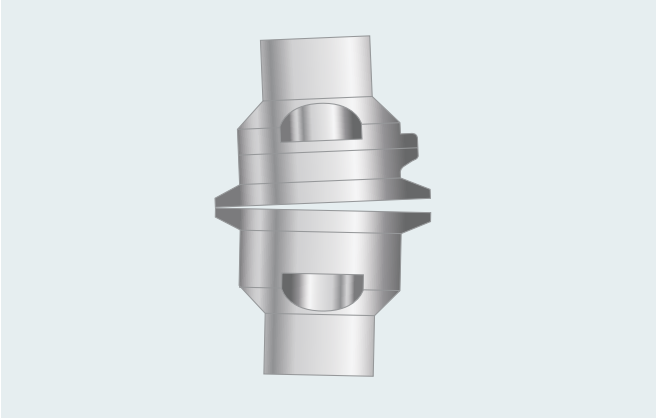

KLAW Breakaway Couplings provide 100% closure even on partial separation.

Other Breakaway Couplings can result in uncontrolled spillage in the event of a partial separation.

# Cryogenic Breakaway Coupling

**The KLAW Breakaway Coupling has breakstuds that hold the two halves of the coupling together. Its purpose is to resist external loads and line pressure up to a pre-determined point.**

The unit activates when it is subjected to forces higher than the breakload setting.

**The K2C offers a distinct advantage over other options:**

- **Easy maintenance and inspection.**
- **Seals and valve cassettes can be replaced without the need for special tools.**

**K2C sizes: 1/2” to 3”**

**Industrial Coupling sizes: 4” to 12”**

**1.** Internal flaps are positioned in line with the flow. These keep each other open, offering minimum headloss.

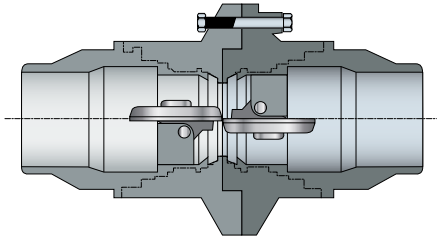

**2.** As the unit begins to separate, the discs flip through a controlled arc.

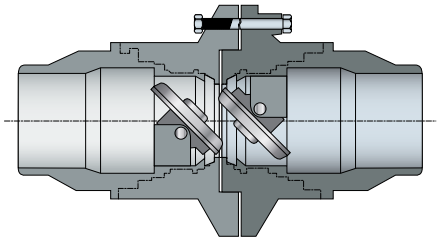

**3.** The discs continue to rotate until they have moved through 90 degrees.

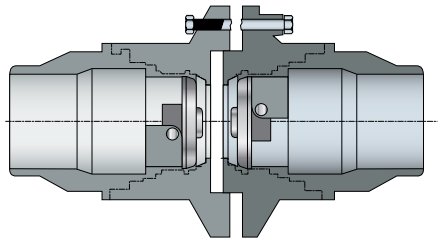

**4.** The discs snap onto their seats, providing 100% shut-off.

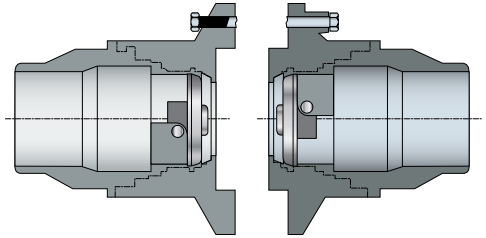

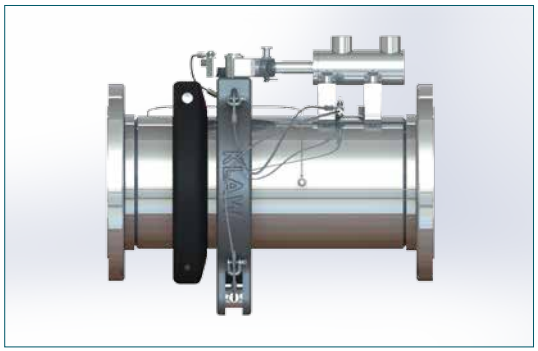

**Available in sizes: 2" to 12"**

## The KLAW Emergency Release Coupling (ERC) has a Collar Release Mechanism that is activated via a hydraulic system.

This provides the option for predetermined release of the Emergency Shutdown (ESD) system, rather than being reliant on forces applied through the transfer system.

**1.** Valve mechanism is in open flow status.

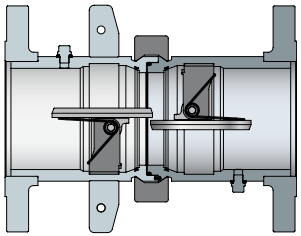

**2.** Collar Release is activated via the Hydraulic System. Valves start to close as the unit separates.

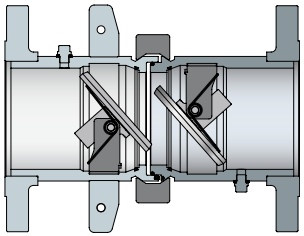

**3.** Body seal retains media beyond the point of valve closure.

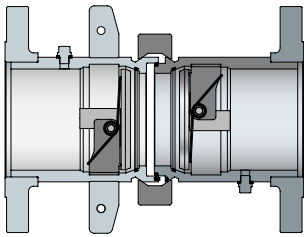

**4.** Valves are now closed and the separation sequence continues.

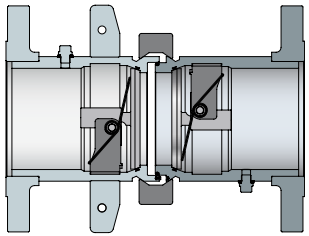

**5.** Collar Release is detached and the coupling is separated.

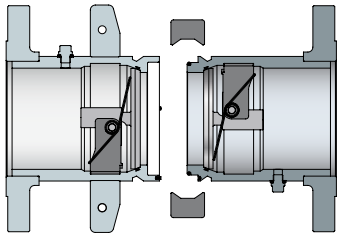

# The highest standards

## Fitting a KLAW Breakaway Coupling ensures that you have done everything to protect assets and ensure the safety of personnel and the public.

### Testing and standards

All KLAW units for Cryogenic application are tested to ensure they conform to the highest of industry and safety standards. All couplings are supplied with test certification which is provided at no extra cost.

**Every coupling is both ambient and cryogenically tested.**

### Materials

Stainless steel.

Other materials are available on request.

### Standards:

PED (Pressure Equipment Directive 97/23/EC) and ATEX (directive 94/9/EC)

CRN Approval Pending

## The KLAW range

Marine Breakaway Couplings
Industrial Breakaway Couplings
Quick Connect Disconnect Couplings
Full Bore Marine Breakaway Couplings
Emergency Release Systems
Cryogenic Emergency Release Systems
Camlocks
Swivel Joints

## LNG ship transfer safety systems

KLAW is a leading provider of safety transfer systems for the LNG sector.

Applications include Ship-to-Ship, Ship-to-Shore, Bunkering.

Emergency Release Systems
Hydraulic Power Units
Cryogenic Flange Camlocks

**ARINEX SDN BHD (409090-K)**
No 17, Jalan SBJ 2
Taman Industri S.B. Jaya
47000 Sg. Buloh
Selangor, Malaysia

ISO 9001
BUREAU VERITAS
Certification

UKAS QUALITY MANAGEMENT
008

Tel: +603 - 6157 2000 / 5000 / 6000, 6156 7000
Fax: +603 - 6148 8000
www.arinex.com
mail@arinex.com

Product descriptions and specifications are subject to change without prior notice. KLAW recommends that all information and data are confirmed with our technical department before specifying, ordering or commissioning. Copyright © All information provided is subject to international copyright, trademark and patent laws and cannot be reproduced without the expressed and written permission of KLAW Products Ltd. Trademarks protected: KLAW™ and QS™. Protected by Worldwide Patents.

K.GA.A.E1310D

**A Signum Technology company**

**Tel: +603 - 6157 2000 / 5000 / 6000, 6156 7000**
**mail@arinex.com**
**www.arinex.com**